DWG NO.	SH	REV
LCD-1208328	01	-

VENDOR: DINA CONSULTING
612 ST SOUTH
NAMPA IDAHO 83651

P/N: LCD-1208328
UOM: EA

2 YEAR WARRANTY

DESIGNED TO EXCEED EMC REQUIREMENTS IEC 60571

CONTACT INFO:

SALES REP: JOHN DINA
PH: 1-208-440-1877
EMAIL: JOHN@DINACONSULTING.COM

INPUT POWER

VOLTAGE RANGE:	46VDC - 74VDC OR 120VAC

ENVIRONMENT

OPERATIONAL AMBIENT TEMP:	-25C TO +85C
STORAGE TEMP:	-30C TO +100C

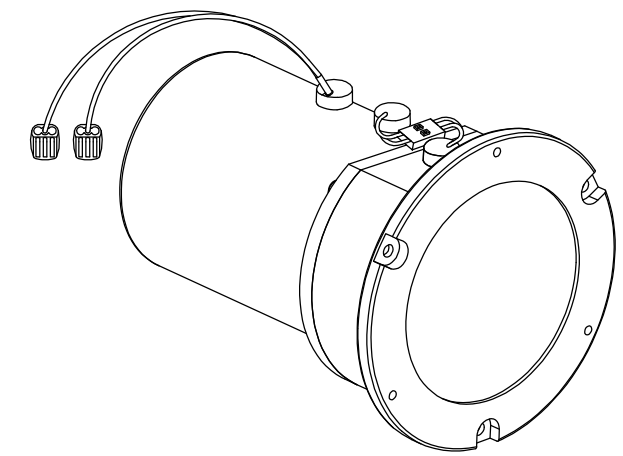

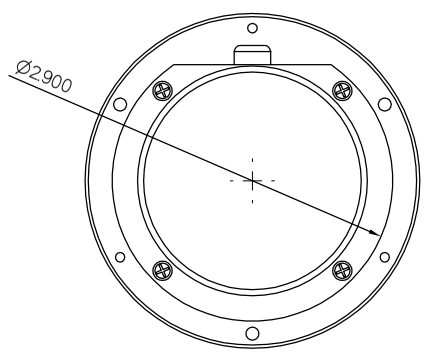

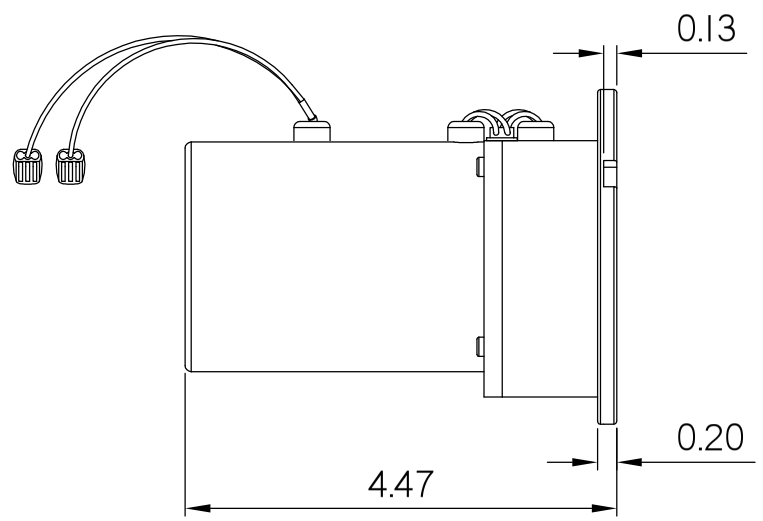

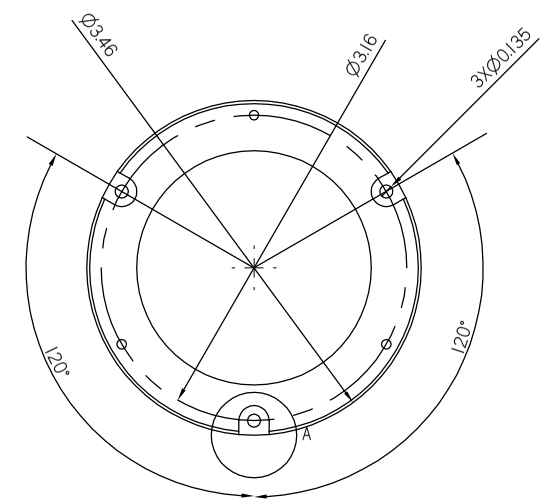

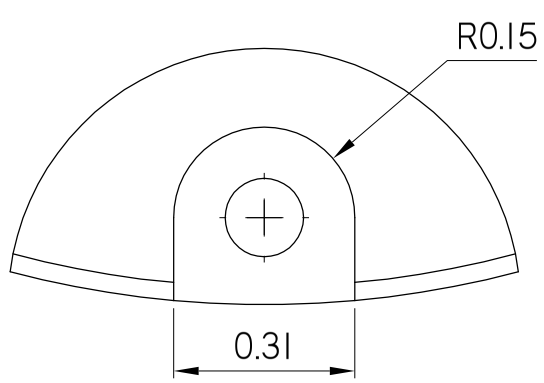

DETAIL A
SCALE 3 : 1

REV	DESCRIPTION	DATE	
-	INITIAL RELEASE	REVISED BY CHECKED BY RELEASED BY	J. MANGEAC DCD J. DINA
			08/26/16

REVISION HISTORY

UNLESS OTHERWISE SPECIFIED, DIMENSIONS ARE IN INCHES. TOLERANCES ARE:

DECIMALS	FRACTIONS
.X = ±.2	X/X = ±1/4
.XX = ±.06	ANGLES
.XXX = ±.010	X = ±1°
	X.X = ±0.5°

DO NOT SCALE DRAWING

THIRD ANGLE PROJECTION

APRROVALS		
DRAWN:	JOMANGEAC	08/05/16
CHECKED:	DCD	08/26/16
ENGINEER:	JDINA	07/26/16
FIRST USED		
MODEL FILE		
DRAFT FILE		
LAST SAVED		

DC & D
DINA CONSULTING & DESIGN

612 IST SOUTH
NAMPA IDAHO
83651

DESCRIPTION
EMERGENCY CAB LIGHT W/90MIN BACKUP BATTERY

DWG SIZE	DRAWING NUMBER	REV
B	LCD-1208328	-

SCALE: 1/2 | WEIGHT: 1.4 LBS | SHEET 01 OF 01